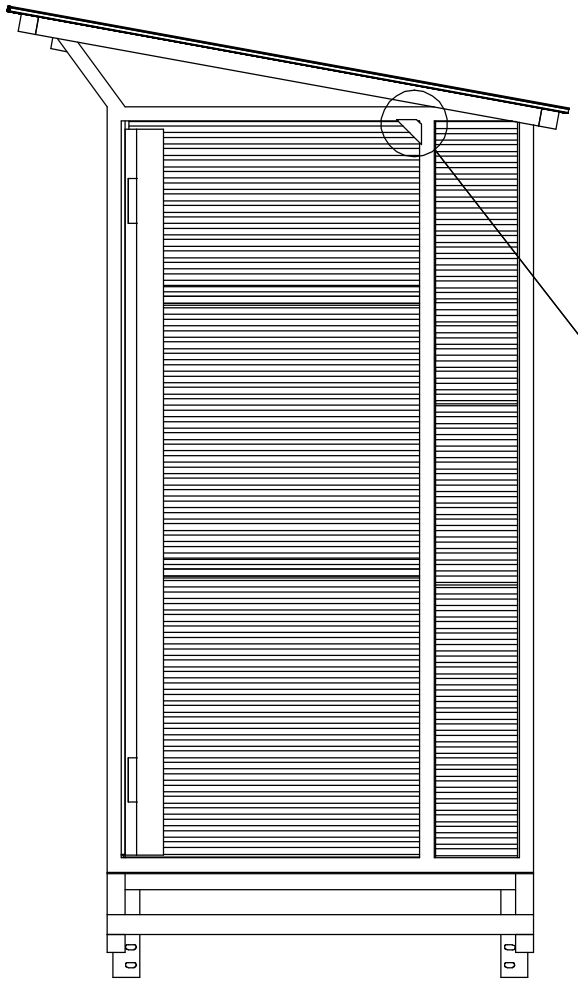

FRONT VIEW

DO NOT SCALE

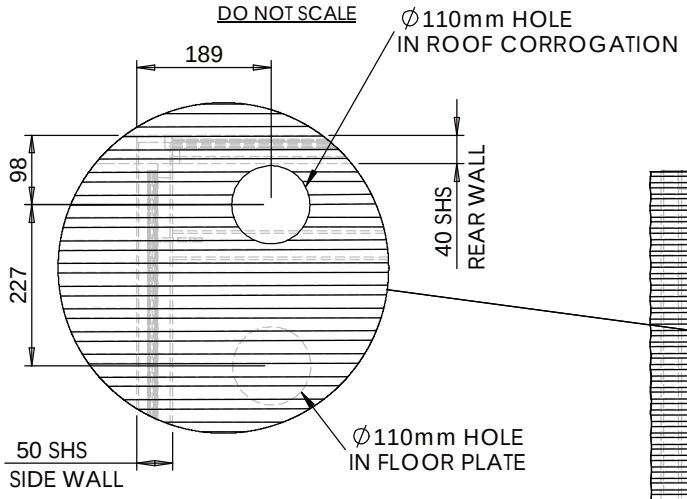

ROOF VENT HOLE DETAIL (1 : 10)
(QUALITATIVE)

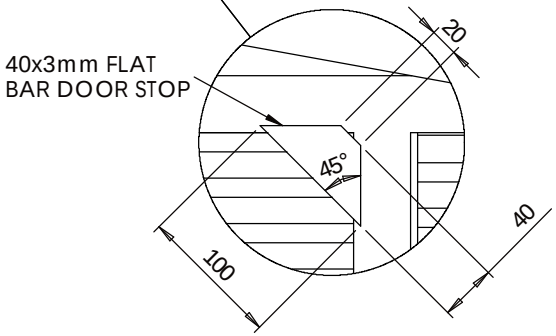

DOOR RETAINER DETAIL (1 : 5)

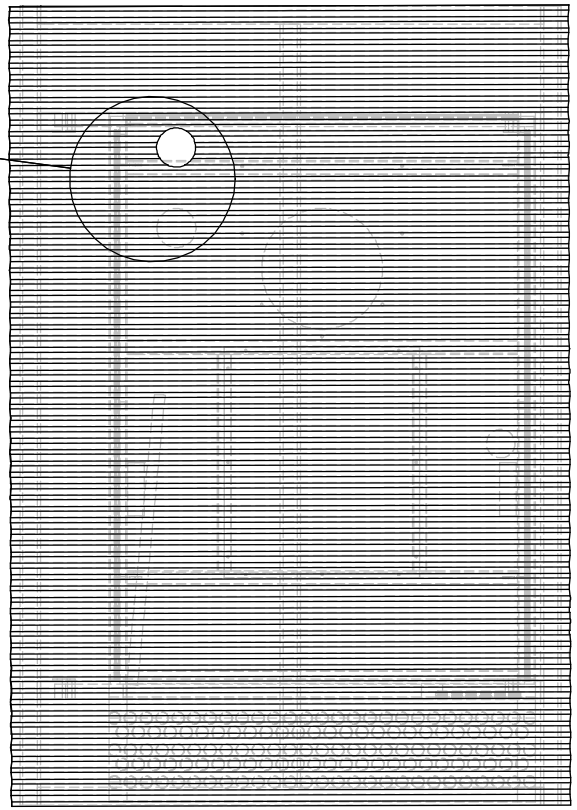

TOP VIEW

No.	DATE	BY	DESCRIPTION	GOUGH
			REVISION	APPROV.

GOUGH PLASTICS
Custom Rotational Moulders
AUSTRALIA

Gough Industries Pty. Ltd.
833 Ingham Road
Bohle, Townsville
P.O. Box 1258, Aitkenvale, Qld. 4814.
Telephone 07 47747606
Facsimile 07 47747608
A.C.N. 010 028 547

This drawing remains the property of Gough Industries Pty. Ltd.
It is subject to Gough Industries Pty. Ltd.'s recall and must not
be reproduced in part or whole or it's contents divulged to third parties
without prior written approval from Gough Industries Pty Limited.

	Signature	Date
DRAWN	S.NAGY	1.04.03
DRN. CHK	T.D.S	1.04.03
ENGINEER		
ENG. CHK		
Eng. APPROVAL		
CONTROLLED DOCUMENT	NO	

HYBRID TOILET SYSTEM - SAFARI STRUCTURE

MANUFACTURING DETAILS

SCALE	Gough Plastics Drg. No.	REV
1:20	A4	900.7010-03

CAD FILE : H:\HYBRID TOILET SYSTEM\6 PERSON\SAFARI\